Modeling and Simulation Analysis of PEM Fuel Cell Stack for Stationary Applications

Alexander K. Kinov[1], Dimitar D. Arnaudov[1], Krasimir Y. Kishkin[1], Ts. G. Grigorova[2], Dimitar N. Penev[1]

[1]Department of Power Electronics, Faculty of Electronic Engineering and Technologies
Technical University of Sofia
8 Kliment Ohridski blvd., 1000 Sofia, Bulgaria
[2]Department of Electronics, Faculty of Electronics and Automation
Technical University of Sofia, Plovdiv Branch,
Plovdiv, Bulgaria 63 Sankt Petersburg blvd., 4000 Plovdiv, Bulgaria
akinov@tu-sofia.bg, dda@tu-sofia.bg, kishkin@tu-sofia.bg, c_gr@tu-plovdiv.bg, dim_penev@tu-sofia.bg

Abstract – **The paper presents a simulation study of a system with a PEM hydrogen fuel cell. Models for the cell and converters are proposed in the PLECS simulation environment. The system is designed for stationary applications and a 48 V DC bus. The developed models are for a cell with a nominal output power of 1 kW. Given the specified efficiency curves of the individual units, the model allows the search for a system operating mode with maximum efficiency.**

Keywords – **PEM; fuel cell, modeling, characteristics.**

I. Introduction

In recent years, hydrogen fuel cells have become widely used in stationary applications (alternative power supplies in energy storage systems) and mobile applications (electric vehicles with hydrogen fuel cells). Models of hydrogen fuel cell systems are needed to study these systems. Various models based on the chemical processes in the cells are known, but they are designed to reflect in detail the chemical phenomena and the resulting changes in the output characteristics (polarization curves). For the study of the entire system, together with the electronic converters, these models are complex and require significant computing resources and a lot of time.

Since the polarization curve (output characteristic) closely resembles the load characteristic of a rechargeable battery, one of the most commonly used models is similar to those of lithium-ion batteries [1, 2].

These models have curves very close to those of hydrogen fuel cells themselves under specified test conditions. In practice, for the use of hydrogen fuel cells, systems are built in which, in addition to the cells, additional devices and systems are involved to ensure safe and reliable operation and affect the output characteristics of the systems.

Modeling the polarization characteristic of a hydrogen fuel cell is a key process for analyzing its behavior under different loads. The polarization curve represents the relationship between cell voltage and current density, and includes various losses - activation, ohmic, and concentration.

II. Fuel Cels System

A. System for stationary application

The block diagram of the system is shown in Figure 1. The system consists of: A fuel cell stack with fans mounted for cooling and oxygen supply, fuel cell controller which regulates the hydrogen flow rate and fan speed, while also providing protection against overcurrent, undervoltage, and overheating; additionally, it manages cell purging; Short circuit unit (purging device), necessary for the efficient operation of the fuel cell, preventing oxide buildup on the catalyst; auxiliary power supply, typically provided by a battery; fuel cell DC-DC converter - draws the optimal amount of power from the stack; bidirectional DC-DC converter and battery, capable of sourcing or sinking current to maintain a stable DC bus voltage, thereby supporting optimal system performance under dynamic load conditions.

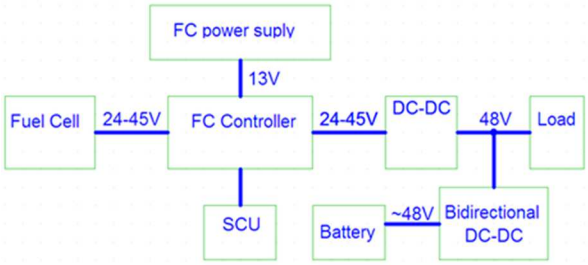

Fig. 1. Block diagram of the fuel cell system.

B. Main characteristics of PEM cell.

The main characteristics of the fuel cell are given in Table 1 [2]. The H-1000 PEM Fuel Cell is a compact, semi-integrated 1 kW air-cooled stack system designed for academic projects and prototypes, with a reasonable fuel efficiency (~40%@1000W), and a complete set of protection and control mechanisms [2].

TABLE I. MAIN CHARACTERISTICS OF PEM CELL [2]

Type of fuel cell	PEM
Number of cells	48
Rated Power	1000W
Performance	28.8V@35A
Reactants	Hydrogen and Air
Max. stack temperature	65º C
H2 Pressure	0.55-0.65bar
Hydrogen purity	99.995% dryH2
cooling Air	(integrated cooling fan)
Efficiency of the stack	40%@28.8V
Low voltage shutdown	24V
Overcurrent shutdown	42A

979-8-3503-8064-4/25/$31.00 ©2025 IEEE

2025 XXXIV International Scientific Conference Electronics (ET) | 979-8-3503-8064-4/25/$31.00 ©2025 IEEE | DOI: 10.1109/ET66806.2025.11204116

Authorized licensed use limited to: UNIVERSIDADE DE SAO PAULO. Downloaded on November 02,2026 at 02:48:19 UTC from IEEE Xplore. Restrictions apply.

The object for modeling is a 1kW PEM fuel cell from the manufacturer Horizon. Figure 2 shows the volt-ampere characteristic. Figure 3 shows the power characteristic.

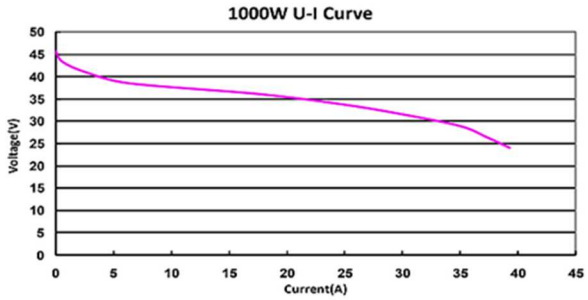

Fig. 2. Volt-ampere characteristic of H-1000 fuel cell stack [2].

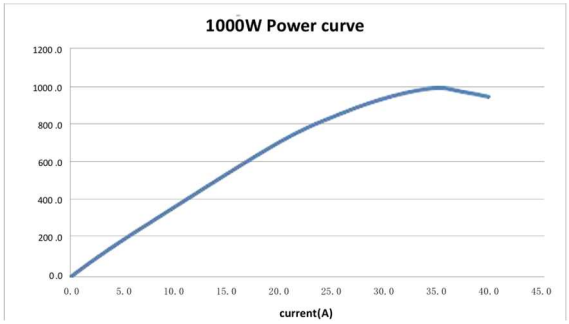

Fig. 3. Power curve [2].

III. Modeling

Numerous models have been developed for the study of fuel cell systems in two areas - modeling of complex electrochemical processes and modeling of electrical parameters. Different approaches have been applied to model electrical parameters [3, 4, 5, 6, 7]. One of the main ones is a galvanic cell equivalent circuit model similar to those used for battery modeling [3]. One of the models for static characteristics modeling is shown in Fig. 4.

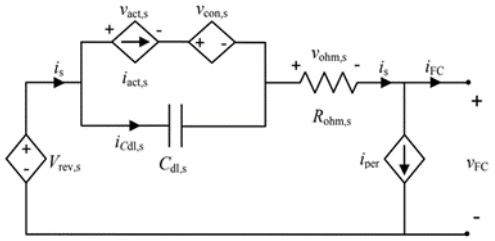

Fig. 4. Static electric model [3].

The model shown can be created for the system under investigation by determining the values of the elements using approximation. For a known characteristic, another approach can be proposed using a table with measured values and set in a one-dimensional array.

A. *Developed a simulation model in the PLECS environment and a lookup table*

To overcome the drawback (slow calculation process when using equations and complex determination of the equivalent parameters of the replacement circuit), another approach for simulation is by using a data array and selecting characteristic points from the curves and inputting them into a 1-D array.

Fig. 5 shows a model developed in the PLECS environment using a 1D-array. It is similar to the previously described model in Fig. 5, but here the function block [8] has been replaced with a 1D Table containing the values extracted from the original curve. The table is used to control a variable voltage source based on the current passing through it (measured by an ammeter). To test it, a variable current source controlled by a linearly increasing signal is used as a load. The U-I curve is displayed in a graph using XY Plot1, and a multiplication block is used to plot the power curve in XY Plot2.

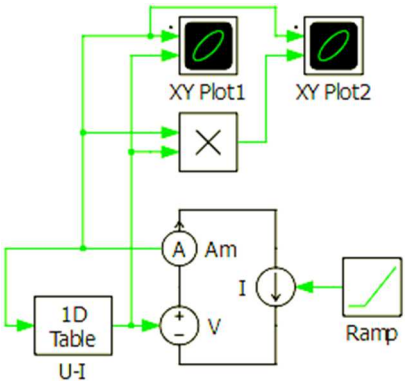

Fig. 5. PLECS FC model using 1-D table.

The values of the points for the volt-ampere characteristic curve are taken from the fuel cell documentation data.

To investigate and optimize the fuel cell electronic converter system, a simulation model of a control system is developed to search for the point of maximum efficiency.

To implement this operating algorithm and to verify the results, a simulation model of the cell has been developed to give the corresponding efficiency at a given power. The characterization of the cell using again a 1-D array is shown in Fig. 6. The efficiency of this figure was obtained by using the characteristics of the entire system given in [4] as a basis and scaling it to the power of the cell under investigation.

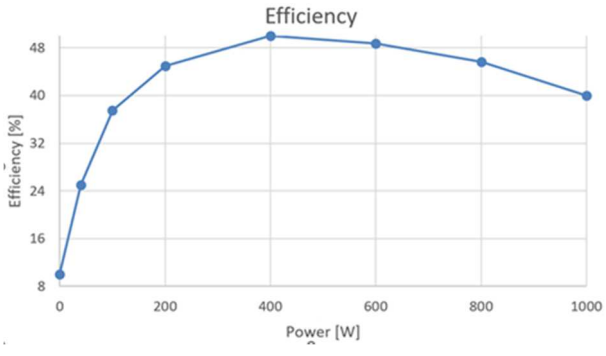

Fig. 6. Modelled cell efficiency characteristic curve.

Fig. 6 and Fig. 7 show results for the volt-ampere and power characteristics obtained from the PLECS model using a 1-D table. This approach was chosen for continued research because the simulations are significantly faster, and the variance in accuracy over the domain used is less than 5 percent.

Authorized licensed use limited to: UNIVERSIDADE DE SAO PAULO. Downloaded on November 02,2026 at 02:48:19 UTC from IEEE Xplore. Restrictions apply.

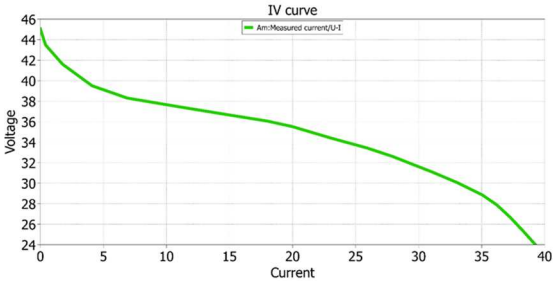

Fig. 7. Simulation result from 1-D table

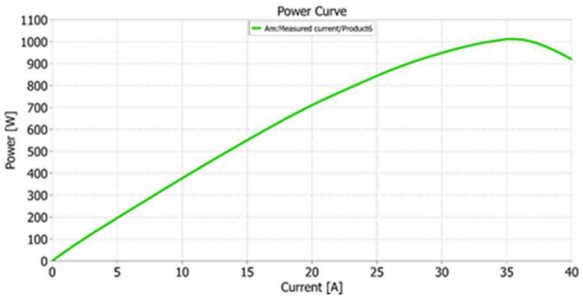

Fig. 8. *Modelled power curve*

B. Model the maximum power search algorithm.

To model the maximum power search algorithm, a script was written based on a standard P&O algorithm used in PV systems. Figure 9 shows a model in PLECS environment for maximum power point search (MPPT algorithm). For this the polynomial model is used, but here the variable current source which is acting as a load is controlled by a C-Script block containing the MPPT algorithm [8]. The C-Script block takes the voltage and current of the fuel cell model as its inputs and varies the load to draw maximum power. The power and current (output of the script block) are plotted in a Scope.

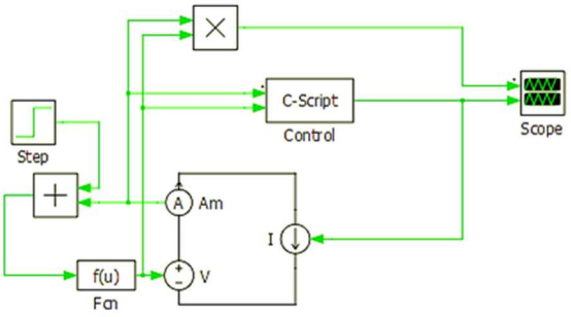

Fig. 9. *Maximum power search algorithm.*

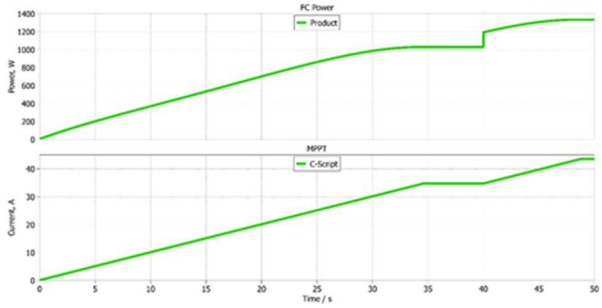

Fig. 10. *Maximum power search algorithm.*

Fig. 10 shows the results of the simulation model for the maximum power point search (MPPT). To illustrate the process in the test, a change of the characteristic at the 40th second is set (a new curve with a new maximum power is set). In the power and cell current plots shown in Fig. 10, it can be seen that the new maximum power point is reached at the 50th second (for this case study).

The search for the operating point of the system with maximum efficiency is performed by changing the load on the system, similar to changing the current through the photovoltaic panel in photovoltaic systems. A similar algorithm is applied, in this case controlling the DC-DC converter connected after the fuel cell in order to control its DC-DC input current. The converter control method used here to find the point of maximum efficiency is also used in systems for wireless power transfer [16, 17].

C. Simulation DC-DC converter.

In order to achieve optimal system performance, a boost DC-DC converter model and a bidirectional converter model have been developed. The boost converter connected between the fuel cell and the 48-volt DC bus acts as a load for the fuel cell. By changing the current through it, a mode is sought in which the hydrogen fuel cell operates at maximum efficiency. A storage battery and a bidirectional converter are used to achieve this mode.

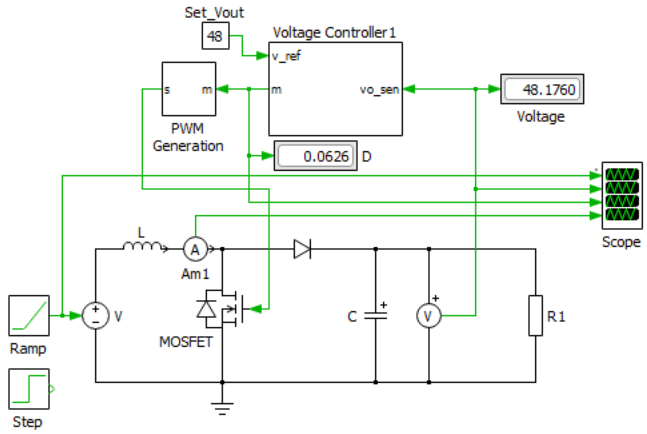

Fig. 11. Boost converter

To study the model of the step-up converter, the input voltage was changed from 24V to 45V (as the cell voltage changes) - input voltage. Other results of the study are: output voltage (48V), duty cycle, and current through the inductance, which is the input current of the converter.

Authorized licensed use limited to: UNIVERSIDADE DE SAO PAULO. Downloaded on November 02,2026 at 02:48:19 UTC from IEEE Xplore. Restrictions apply.

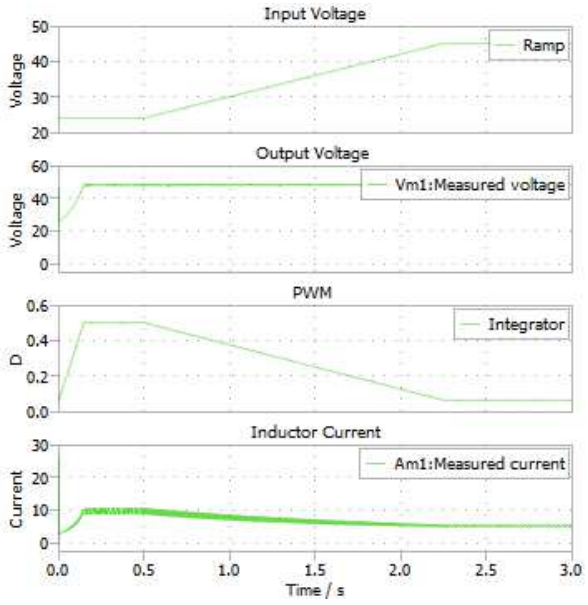

Fig. 12. Simulation results.

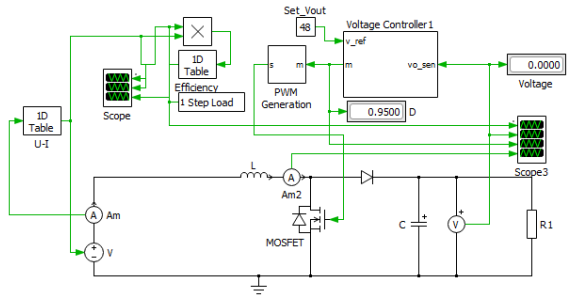

Fig. 13. Simulation system.

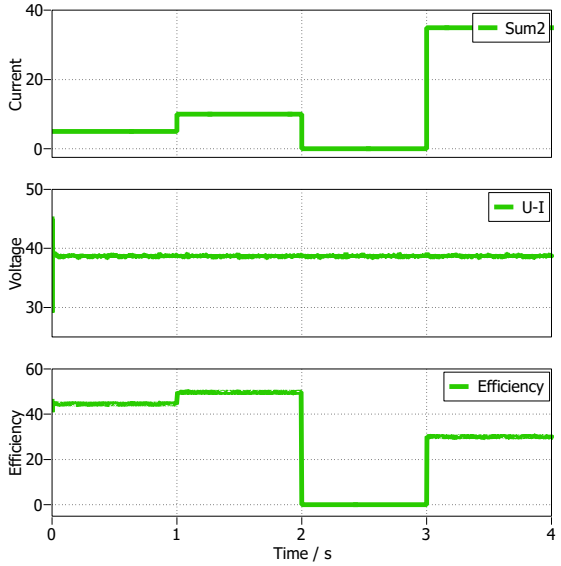

Fig. 14. System results

III. CONCLUSION

Models were developed in the PLECS environment based on two approaches - an approximation curve and a 1-D table. As expected, the speed performance using the table is better compared to the approximation curve. The developed models show sufficient accuracy for engineering practice. They can be used to investigate hydrogen fuel cell systems by evaluating for each specific case which model should be used. The developed models are also suitable for use in HIL systems. This is due to the advantages of the PLECS software environment. The developed model of the maximum curve point search algorithm is applicable for both maximum power point search and maximum system efficiency point search.

ACKNOWLEDGMENT

This research is carried out within the framework of the project “Optimal work of power electronic converters in hydrogen technology – Hydrogen-to-X applications “, КП-06-H87/10 06.12.2024, Bulgarian National Scientific Fund.

All simulations in this paper were carried out using PLECS software from PLEXIM under the PLECS Academic Sponsorship agreement between the Technical University of Sofia and PLEXIM GmbH.

REFERENCES

[1] H-1000XP Fuel Cell Stack User Manual - https://www.horizoneducational.com/document/download?ids=3812&content=1762 - (достъпен 05.20.25)

[2] S. Martín, I.; Ursúa, A.; Sanchis, P. Modelling of PEM Fuel Cell Performance: Steady-State and Dynamic Experimental Validation. Energies 2014, 7, 670-700. https://doi.org/10.3390/en7020670

[3] H. N. Tran, T. -T. LE, H. Jeong, S. Kim and S. Choi, "A 300 kHz, 63 kW/L ZVT DC–DC Converter for 800-V Fuel Cell Electric Vehicles," in IEEE Transactions on Power Electronics, vol. 37, no. 3, pp. 2993-3006, March 2022, doi: 10.1109/TPEL.2021.3108815.

[3] R. Putala and V. Ferencey, "Hydrogen Fuel Cell System Modeling Approaches," 2025 Cybernetics & Informatics (K&I), Mikulov na Morave, Czech Republic, 2025, pp. 1-7, doi: 10.1109/KI64036.2025.10916424.

[4] X. Yang, P. Wang, Q. Li, W. Nie and M. Sun, "Modeling and Simulation Analysis of Fuel Cell Stack Model," 2024 5th International Conference on Clean Energy and Electric Power Engineering (ICCEPE), Yangzhou, China, 2024, pp. 125-128, doi: 10.1109/ICCEPE62686.2024.10931721.

[5] B. Banyat, "Modeling and Analysis of Fuel Cell Systems for Stationary Applications," 2020 International Conference on Power, Energy and Innovations (ICPEI), Chiangmai, Thailand, 2020, pp. 129-132, doi: 10.1109/ICPEI49860.2020.9431570.

[6] S. N. M., O. Tremblay and L. -A. Dessaint, "A generic fuel cell model for the simulation of fuel cell vehicles," 2009 IEEE Vehicle Power and Propulsion Conference, Dearborn, MI, USA, 2009, pp. 1722-1729, doi: 10.1109/VPPC.2009.5289692.

[5] U. Lucia, “Overview on fuel cells,” Renewable and Sustainable Energy Reviews, vol. 30, pp. 164–169, Oct. 2013, doi: 10.1016/j.rser.2013.09.025.

[6] Y. Chang, Y. Qin, Y. Yin, J. Zhang, and X. Li, “Humidification strategy for polymer electrolyte membrane fuel cells - A review,” Applied Energy, vol. 230, pp. 643–662, 2018, doi: 10.1016/j.apenergy.2018.08.125.

[7] A. U. Thosar, H. Agarwal, S. Govarthan, and A. K. Lele, “Comprehensive analytical model for polarization curve of a PEM fuel cell and experimental validation,” Chemical Engineering Science, vol. 206, pp. 96–117, 2019, doi: 10.1016/ces.2019.05.022.

[8] Wang K. Modeling and Simulation Analysis of Proton Exchange Membrane Fuel Cell System[J]. 2021 (6): 141–143. DOI: 10.3969/j.issn.1672-9668.2021.06.060.

[9] S. Y. Choe, J. W. Ahn, J. G. Lee, and S. H. Baek, “Dynamic simulator for a PEM fuel cell system with a PWM DC/DC

Authorized licensed use limited to: UNIVERSIDADE DE SAO PAULO. Downloaded on November 02,2026 at 02:48:19 UTC from IEEE Xplore. Restrictions apply.

converter," IEEE Transactions on Energy Conversion, Vol. 23, No. 2, pp. 669 - 680, 2008.

[10] S. Sumeshan, D. R. Kumar and B. Krishna, "Simulink Model of Proton Exchange Membrane Fuel Cell," 2022 7th International Conference on Environment Friendly Energies and Applications (EFEA), Bagatelle Moka MU, Mauritius, 2022, pp. 1-4, doi: 10.1109/EFEA56675.2022.10063799.

[11] S. Y. Choe, J. W. Ahn, J. G. Lee, and S. H. Baek, "Dynamic simulator for a PEM fuel cell system with a PWM DC/DC converter," IEEE Transactions on Energy Conversion, Vol. 23, No. 2, pp. 669 - 680, 2008.

[12] C. Krupp, R. C. Samsun, R. Peters, D. Stolten, B. Gnörich and S. Baltzer, "Fuel cell — Battery hybrid systems for auxiliary power units," 2014 International Conference on Renewable Energy Research and Application (ICRERA), Milwaukee, WI, USA, 2014, pp. 480-484, doi: 10.1109/ICRERA.2014.7016431.

[13] N. Shamim, A. Bilbao, D. Reale and S. Bayne, "Analysis of Grid Connected Fuel Cell Power System Integrated with Supercapacitor," 2018 IEEE Green Technologies Conference (GreenTech), Austin, TX, USA, 2018, pp. 61-64, doi: 10.1109/GreenTech.2018.00020.

[14] T. S. L. V. Ayyarao, L. V. Suresh Kumar, K. Venkata Ramireddy, B. Priyanka and A. J. Kezhiyur, "Accurate Proton Exchange Membrane Fuel Cell Modelling Using Hiking Optimizer," 2024 2nd International Conference on Cyber Physical Systems, Power Electronics and Electric Vehicles (ICPEEV), Hyderabad, India, 2024, pp. 1-6, doi: 10.1109/ICPEEV63032.2024.10932065.

[15] A. S. Kumar, T. Cermak, S. Misak and B. Horak, "Modeling and simulation for 1.2 kW PEM fuel cell power generation of isolated load conditions," 2015 International Conference on Electrical Drives and Power Electronics (EDPE), Tatranska Lomnica, Slovakia, 2015, pp. 235-240, doi: 10.1109/EDPE.2015.7325299.

[16] Madzharov, N. D. ; Tonchev, A. T. "Inductive high power transfer technologies for electric vehicles", Journal of Electrical Engineering, Vol 65 (2014): Issue 2, 2014, pp. 125 – 128 DOI: 10.2478/jee-2014-0019

[17] D. Dankov, P. Prodanov and N. Madjarov, "Application of an Inductive Power Transfer System for Charging Modern Electric Vehicles," 2021 17th Conference on Electrical Machines, Drives and Power Systems (ELMA), Sofia, Bulgaria, 2021, pp. 1-6, doi: 10.1109/ELMA52514.2021.9503035

Authorized licensed use limited to: UNIVERSIDADE DE SAO PAULO. Downloaded on November 02,2026 at 02:48:19 UTC from IEEE Xplore. Restrictions apply.