Enhancing Power Quality in Renewable-Integrated Grids Using Small Modular Reactors

Raouf M. Elfaramawy
Research and Development Depart.
Nuclear Power Plants Authority
Cairo, Egypt.
faramawy@nppa.gov.eg

Amr A. Sarhan,
Electrical Department
Military Technical College
Cairo, Egypt.
amrsarhan_39@mtc.edu.eg

Sherif Helmy
Chief Executive Officer
Nuclear Power Plants Authority
Cairo, Egypt.
sherif.helmy@mtc.edu.eg

Amgad S. El-Wakeel
Electrical Department
Military Technical College
Cairo, Egypt.
dramgedelwakeel@gmail.com

2025 15th International Conference on Electrical Engineering (ICEENG) | 979-8-3315-1901-8/25/$31.00 ©2025 IEEE | DOI: 10.1109/ICEENG64546.2025.11031384

Abstract*– Integrating renewable energy sources (RESs), such as photovoltaic and wind power, alongside nuclear power plants (NPPs), into the electric grid is crucial for achieving sustainability and reducing greenhouse gas emissions. However, the integration of RESs presents significant challenges to grid stability and power quality (PQ). While numerous solutions have been proposed to enhance PQ under high RES penetration, many are costly, unreliable, or lead to power losses due to energy conversion. This study investigates the potential of NPPs, particularly small modular reactors (SMRs), as a stable solution for improving PQ. NPPs enhance grid stability and reliability through synchronous generators (SGs), which provide critical grid inertia. A SimPower Systems model is employed to simulate a power system incorporating RESs (e.g., a 4.5 GW wind farm) and an NPP composed of multiple SMR units (10 × 300 MW) equipped with SGs. The findings highlight how NPPs can effectively maintain grid reliability and stability under various disturbances.

Keywords*-- power quality (PQ); nuclear power plants (NPPs); small modular reactor (SMRs) renewable energy sources (RESs); Synchronous generators (SGs); Energy Storage Systems (ESSs).

I. INTRODUCTION

The growing integration of renewable energy sources (RESs) like photovoltaic and wind power into the grid has led to power quality (PQ) challenges, such as voltage fluctuations, frequency instability, and harmonic distortions. Large-scale commercial nuclear power plants (NPPs) and innovative small modular reactor (SMR) designs present a promising solution due to their stable and consistent power output. Commercial NPPs typically utilize large-scale synchronous generators (SGs) with capacities between 600 MW and 1600 MW, while SMRs employ smaller SGs with capacities of 300 MW or less [1], [2].

Historically, grid reliability has relied heavily on inertia—the tendency of rotating machines to maintain motion. In traditional power systems, synchronous machines in fossil fuel, nuclear, and hydroelectric plants supply stored energy that helps stabilize the grid during disturbances. However, PQ can deteriorate when significant changes occur in supply voltage magnitude, frequency, or waveform due to faults, nonlinear loads, or the integration of power electronics associated with RESs. These disturbances often lead to financial losses for utilities, customers (particularly industrial users), and equipment suppliers [3], [4], [5].

This study examines the role of NPPs, especially SMRs, in improving PQ and grid stability amid declining fossil fuel reserves and their environmental consequences. A wind farm integrated into the grid, accounting for variations in wind speed, is modeled using MATLAB/Simulink. Stability is assessed by simulating a multi-unit NPP equipped with SGs, transmission lines, a grid, and loads.

II. Challenges of Integrating Renewable into the Grid and Their Impact on Power Quality

Integrating renewable energy sources (RESs) presents significant challenges to grid stability and power quality. Photovoltaic and wind energy are inherently intermittent and variable, as they depend on weather conditions and time of day. This variability leads to fluctuations in power generation, making it challenging to balance supply and demand in real-time. For instance, photovoltaic generation drops to zero at night, while wind power can experience substantial variations within minutes [6], [7].

Unlike conventional power systems, RESs such as photovoltaic and wind rely on power electronics (inverters) that lack inherent inertia. Traditional systems depend on synchronous generators (e.g., those in NPPs) to stabilize grid frequency. The reduced inertia in RES-dominated grids increases vulnerability to frequency instability during sudden changes in load or generation, such as a rapid decline in wind speed.

Photovoltaic (PV) power plants are often connected to the grid at the distribution level, which can cause voltage fluctuations, including overvoltage during sunny periods and undervoltage at night [8]. Additionally, the power electronics used in RESs introduce harmonics into the grid, distorting voltage and current waveforms. This distortion can lead to overheating, increased energy losses, and malfunctions in sensitive equipment [9].

Distributed renewable generation can also result in reverse power flow, where electricity flows from distribution networks back to transmission networks. This phenomenon can cause transformer overloading, disrupt protection coordination, and lead to voltage rises. For example, excess PV power generated in residential areas may flow back into the grid, placing additional stress on infrastructure.

III. CURRENT SOLUTIONS FOR IMPROVING PQ WITH HIGH RES PENETRATION

Advanced power electronics, such as smart inverters, static VAR compensators (SVCs), and STATCOMs, offer capabilities like voltage and frequency regulation, reactive power control, and harmonic filtering [10].

Energy storage systems (ESSs) are being implemented as solutions, including batteries (which store excess energy during periods of high generation and release it during low generation), supercapacitors and flywheels (which provide rapid frequency response for short-term balancing), and pumped hydro and hydrogen storage (which facilitate long-duration energy balancing).

Advanced monitoring and control technologies in modern grids enable real-time grid oversight. Demand response programs adjust consumer demand based on grid conditions, while localized grids enhance resilience and power quality (PQ).

Hybrid power plants integrate photovoltaic, wind, and storage systems to stabilize energy output. Grid-forming inverters mimic the behavior of synchronous generators (SGs), providing virtual inertia to support grid stability [11], [12].

IV. ROLE OF NUCLEAR POWER PLANTS IN ENHANCING POWER QUALITY

Nuclear power plants (NPPs), especially small modular reactors (SMRs), play a vital role in improving power quality (PQ) as the proportion of intermittent renewable energy sources (RESs) like photovoltaic (PV) and wind power grows. SMRs deliver stable baseload power and provide flexible operation, helping to counteract fluctuations caused by the variability of renewables. Unlike RESs, nuclear power is not reliant on weather conditions, making it a dependable energy source [15].

NPPs contribute substantial inertia to the grid, which helps stabilize frequency deviations resulting from sudden changes in renewable energy generation. Advanced NPPs can also modulate their output within certain limits to support additional frequency regulation. By adjusting the excitation of their generators, NPPs can stabilize voltage, preventing issues such as sags, swells, and flicker. This capability is particularly important in grids with high RES penetration [16], [17].

NPPs maintain consistent power output, ensuring grid stability and reducing dependence on fossil fuels. They enhance grid resilience by providing continuous power, even during extreme weather events or fuel shortages. Their ability to operate for long periods without refueling ensures stability during extended periods of renewable intermittency. SMRs, with their greater operational flexibility, are particularly well-suited for regions with high renewable energy integration.

V. SMALL MODULAR REACTORS (SMRS) VS ENERGY STORAGE SYSTEMS (ESS), AND ADVANCED POWER ELECTRONICS

A comparison of SMRs, energy storage systems (ESS), and advanced power electronics in terms of cost, effectiveness, and scalability is essential for evaluating their roles in grids with high renewable energy penetration.

In terms of cost, SMRs have significant upfront expenses but benefit from lower operational and maintenance costs over their long lifespan (60+ years). ESS involve moderate upfront costs, along with ongoing maintenance and replacement expenses, such as battery degradation over time. Power electronics are generally less costly initially but may require frequent upgrades [18], [19].

In terms of effectiveness, SMRs provide grid stability through the inertia of synchronous generators (SGs), making them highly effective for maintaining grid stability. ESS are excellent for fast frequency response and short-term balancing, while power electronics offer rapid voltage and frequency regulation but lack the inertia provided by SGs [20].

In terms of scalability, SMRs are modular and can be deployed incrementally. ESS can also be scaled incrementally, though some technologies, like pumped hydro, face geographical limitations. Power electronics are highly scalable but rely on advanced grid management systems for optimal operation [21].

VI. SIMPOWER-SYSTEM MODEL

A seventh-order per-unit (pu) model of SGs for ten NPP power units, along with a wind farm connected to the grid, has been implemented, as depicted in Figure 1.

The model is implemented to demonstrate and verify how the response of NPPs under various disturbances, and emphasizing their critical role in mitigating grid power quality (PQ) challenges.

The model incorporates synchronous generators (SGs) for each nuclear power plant (NPP) unit, featuring parameters such as stator and rotor currents, d-q axis currents, excitation currents, load angle, power output, rotor speed, and others. The NPP comprises ten small modular reactor (SMR) units, each with an apparent power of 320 MVA and a nominal output voltage of 24 kV. The SGs are two-pole round rotor machines operating at a nominal speed of 1500 rpm and are integrated into a 50 Hz power system.

The wind farm has a total capacity of 4.5 GW and is connected to a 60,000 MVA grid with a nominal voltage of 500 kV and a peak load of 50 GW. A variable wind speed input parameter is applied to the wind farm to simulate real-world conditions, affecting the wind turbine rotor speed and the corresponding wind farm output power, as shown in Figure 2.

The modeling is carried out using SimPowerSystems, a component of MATLAB Simulink. This tool includes a library named Powerlib, which contains models of synchronous, asynchronous, and DC machines. Powerlib provides six distinct models of three-phase synchronous machines, with parameters that can be specified in either per-unit (pu) or SI units. Based

on the defined direction of mechanical power, these synchronous machines can function in either motor or generator mode [24], [25].

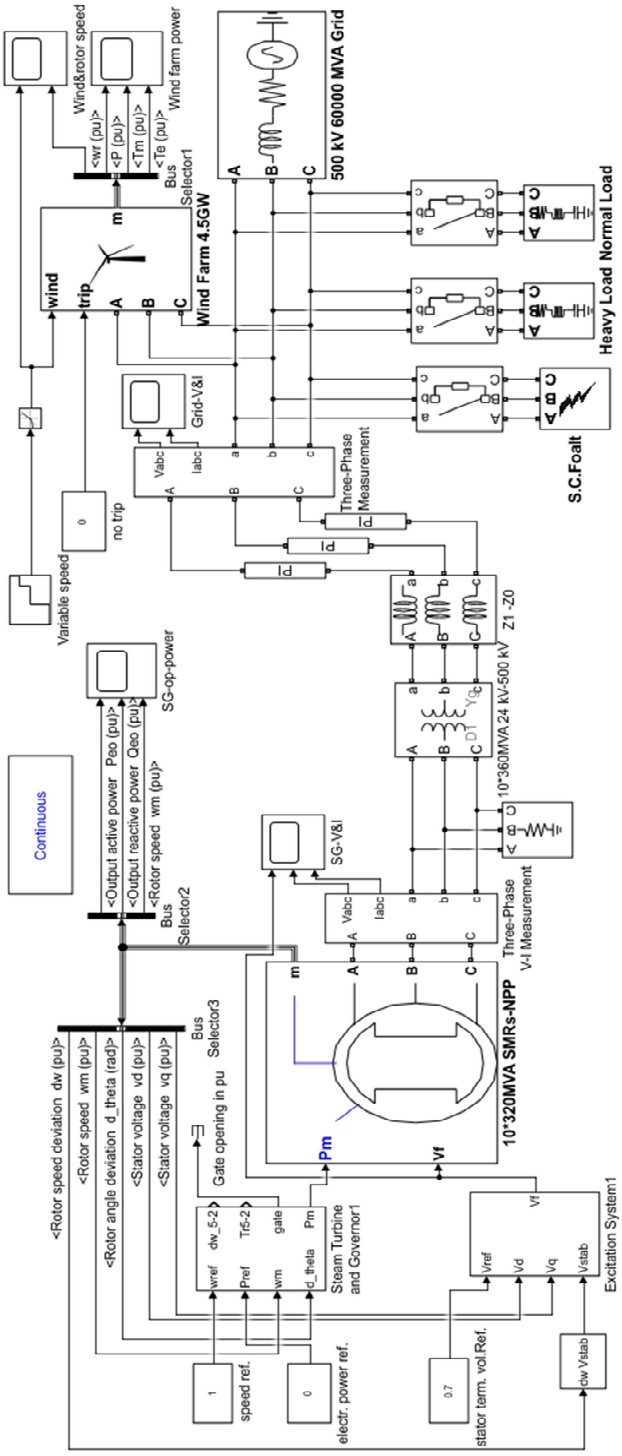

Figure 1. Model of seventh order in pu of a power unit's SGs & Wind farm connected to Grid

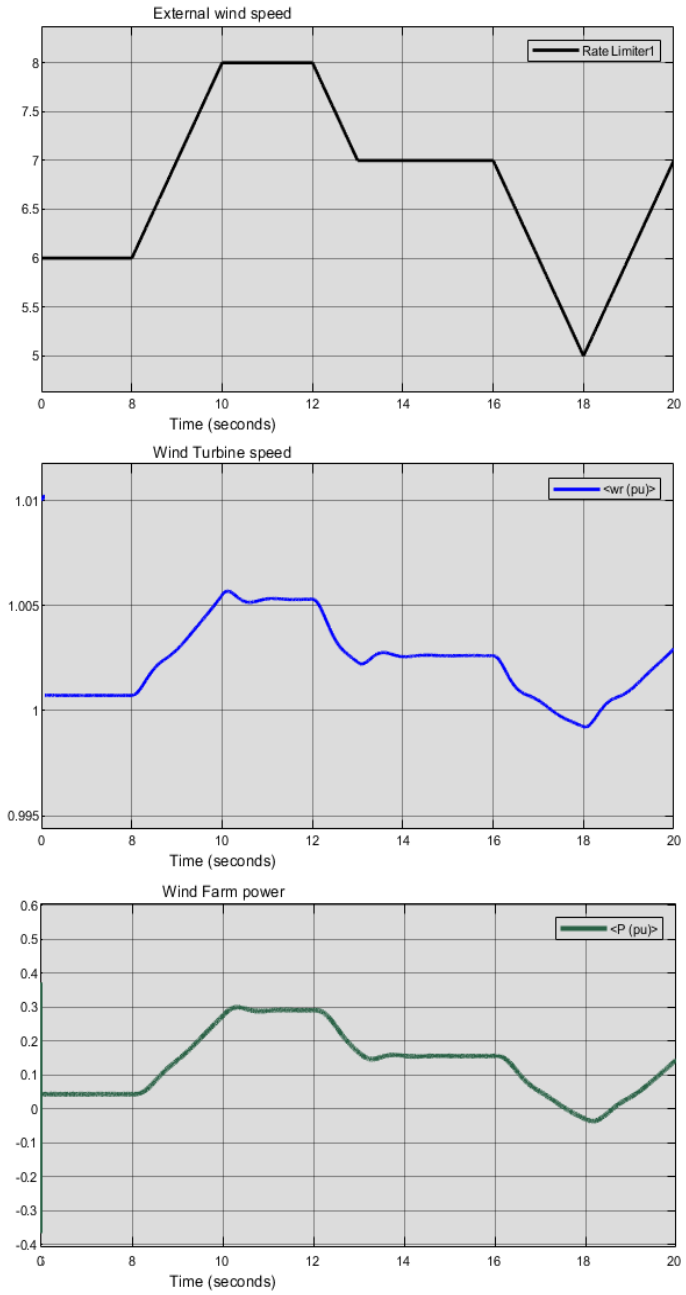

Figure 2. Proposed external wind speed and its corresponding effect in Wind Farm net power output

The study incorporated an NPP consisting of 10 SMR units connected to the unified grid to evaluate their output response and the grid's behavior under three potential PQ disturbance scenarios. The first scenario involves normal operation without power interruption but with fluctuating power output from a large wind farm. The second scenario examines the effects of a single line-to-ground fault, where voltage sag and swell are observed in the faulted and non-faulted phases, respectively. The third scenario investigates the impact of connecting a heavy load, which is expected to cause transient voltage and frequency fluctuations.

VII. SIMULATED SCENARIOS AND RESULTS

Based on the model described above and assuming the specified normal and abnormal operating conditions, we executed the model for each case to obtain the following results.

When executing Case-1 under normal operation and load conditions, the Sim-Power simulation results are shown in Figure 3. The grid voltage and frequency remain stable, while the output of the large wind farm varies due to simulated changes in wind speed, as previously mentioned.

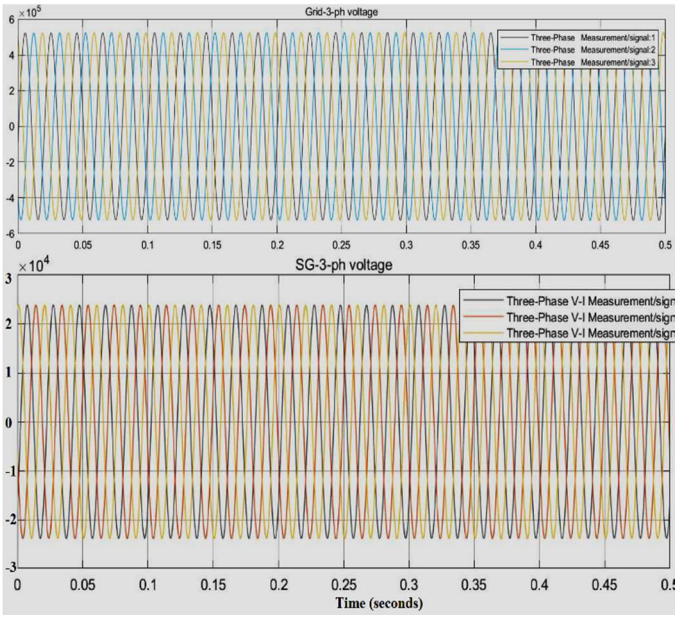

Figure 3: Voltage and frequency behaviour of the grid and the NPP under normal operation

In Case-2, a single line-to-ground fault (at Phase-A) was introduced for a duration of 100 milliseconds. The Sim-Power simulation results, shown in Figure 4, reveal a noticeable voltage sag in the grid voltage and distortion in the wind farm's power output. However, the NPP generator voltage experiences only minimal power quality (PQ) disturbance.

For Case-3, a heavy load was connected to the grid, leading to transient effects as illustrated in Figure 5.

The transient impact on the NPP output voltage is minimal, whereas the grid voltage shows more significant disturbances, along with a relatively high power output disturbance of the wind farm.

In all cases, the voltage and frequency of the NPP units connected to the grid remain within the desired ranges, even under abnormal conditions and when integrating a large wind farm with continuously variable output.

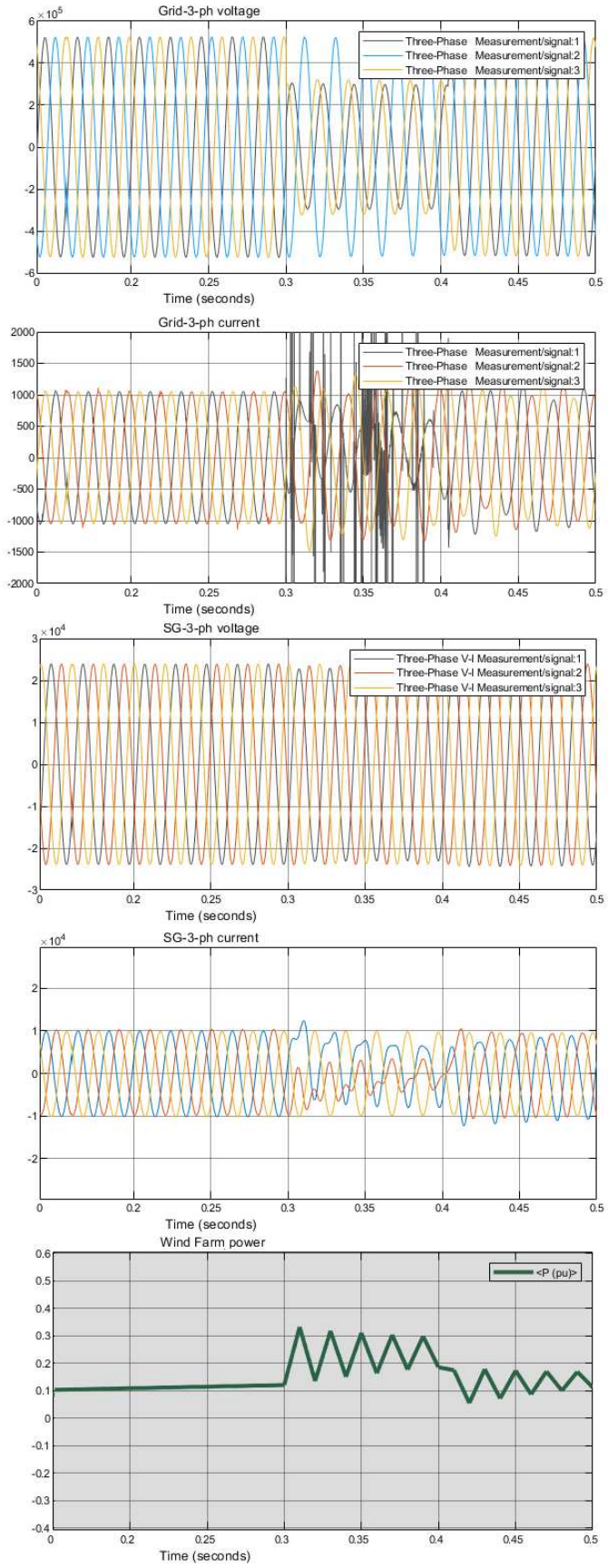

Figure 4: Disturbance due to Line-to-Ground Fault

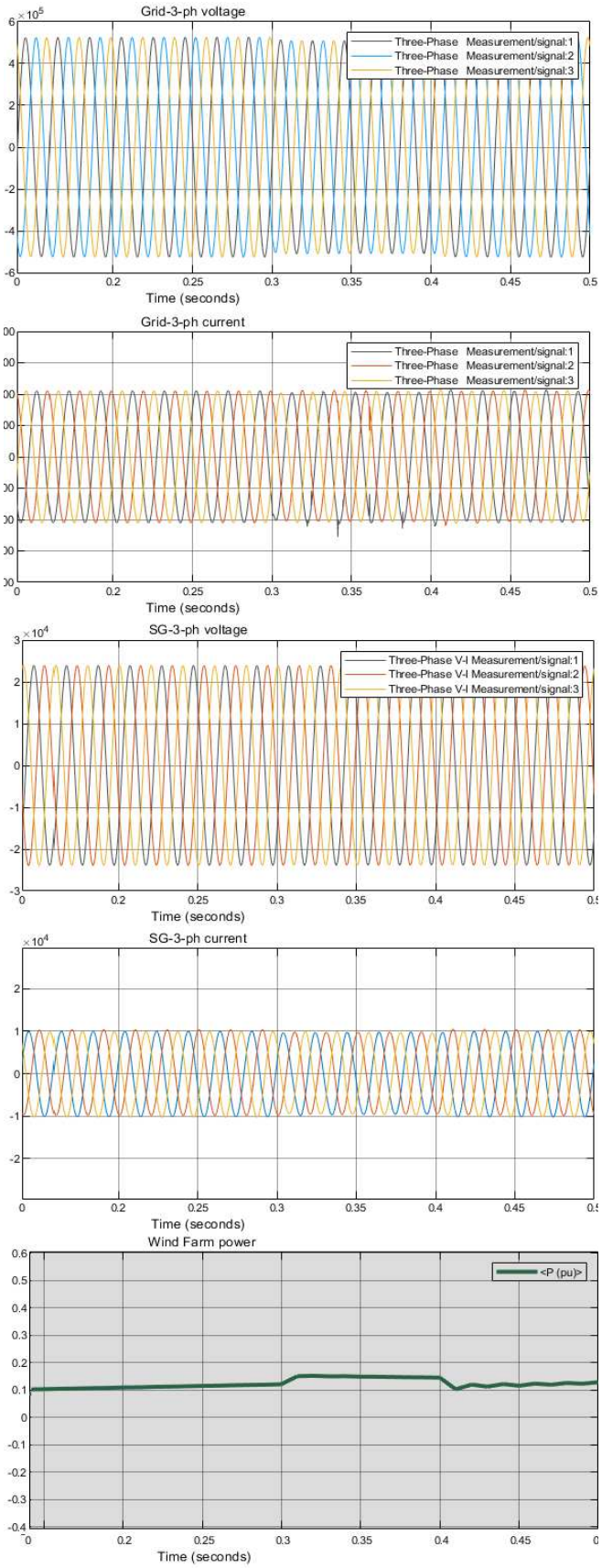

Figure 5: Transient of heavy load connection

VIII. CONCLUSION

Nuclear power plants (NPPs), particularly small modular reactors (SMRs), have shown significant potential to enhance power quality (PQ) and grid stability in renewable-integrated power systems. This study underscores the critical role of NPPs in providing grid inertia, frequency regulation, and voltage stabilization, which are essential for mitigating the challenges posed by the intermittent nature of renewable energy sources (RESs) like wind and photovoltaic power. Using a MATLAB/Simulink model, the behavior of an NPP with synchronous generators (SGs) was simulated under various disturbances, including fluctuating wind farm output, line-to-ground faults, and heavy load connections. The results consistently demonstrated that NPPs can maintain stable voltage and frequency levels, even under adverse conditions, highlighting their reliability and resilience.

SMRs are particularly effective for providing grid stability, baseload power, and resilience, making them well-suited for large-scale integration with renewables. While energy storage systems (ESS) excel at short-term balancing and frequency regulation, they are less effective for long-duration storage and depend on the availability of critical materials. Similarly, power electronics offer cost-effective and scalable solutions for real-time PQ improvement but lack the inertia and long-term stability provided by SMRs.

As the global energy landscape transitions toward low-carbon systems, the role of NPPs in maintaining grid stability and reliability will become increasingly vital. Policymakers, grid operators, and energy planners must consider integrating NPPs, particularly SMRs, into a diversified energy mix that balances sustainability, reliability, and resilience. Future research should focus on optimizing the integration of NPPs with RESs, exploring advanced control strategies, and addressing economic and environmental considerations to ensure the long-term viability of nuclear power in decarbonized energy systems.

REFERENCES

[1] IEA Report (2022). Nuclear Power and Secure Energy Transitions.

[2] IEA Report (2021). The Role of Nuclear Power in Clean Energy Systems.

[3] NEA (2019). The Role of Nuclear Power in Clean Energy Systems.

[4] World Nuclear Association (2023). Nuclear Power in the World Today.

[5] International Atomic Energy Agency (IAEA). (2021). The Role of Nuclear Power in Supporting a Decarbonized Electricity Grid.

[6] IRENA (2020). Renewable Energy Integration: Technical Considerations.

[7] IEEE (2020). Power Quality Issues in Modern Power Systems.

[8] IEEE Power & Energy Society. (2021). "Impact of Renewable Energy Sources on Power System Stability and Power Quality."

[9] ElMoursi, M. S., & Al-Saud, M. S. (2020). "Power Quality Challenges in Renewable Energy Systems." IEEE Access, 8, 17549–17568.

[10] Bistline, J. E., & Blanford, G. J. (2021). Impact of Nuclear Energy on Power System Flexibility and Decarbonization. Published in Energy Policy.

[11] Kou, G., et al. (2020). "Hybrid renewable and nuclear systems: A review of technical issues and power quality improvement strategies." Applied Energy, 261, 114407.

[12] Zhang, X., Wang, X., & Liu, Y. (2020). "Techno-Economic Analysis of Hybrid Nuclear-Renewable Energy Systems." Applied Energy, 280, 115–132.

[13] Golubchikov, O. (2020). "Flexible nuclear power for the low-carbon grid." Energy Strategy Reviews, 30, 100514.

[14] EPRI (2020). Nuclear Power's Role in Enhancing Grid Resilience.

[15] IAEA (2021). Advances in Small Modular Reactor Technology Developments.

[16] NEA (2021). "Nuclear Energy's Contribution to Grid Resilience and Reliability." Nuclear Energy Agency Report.

[17] Konstantinou, C., & Hatziargyriou, N. D. (2020). "Flexibility Needs in Renewable-Integrated Grids: Can Nuclear Provide a Solution?" Renewable and Sustainable Energy Reviews, 134, 110291.

[18] IEEE Guide for Synchronous Generator Modeling Practices and Parameter Verification with Applications in Power System Stability Analyses, IEEE Std 1110™-2019.

[19] Synchronous Machine Modeling, November 21, 2019, WECC MVWG Jamie Weber, Ph.D.

[20] Golubchikov, O. (2020). "Flexible nuclear power for the low-carbon grid." Energy Strategy Reviews, 30, 100514.

[21] V.K. Mehta, Rohit Mehta. Principles of Electrical Engineering.

[22] IEEE Guide for Synchronous Generator Modeling Practices and Parameter Verification with Applications in Power System Stability Analyses, IEEE Std 1110™-2019.

[23] Synchronous Machine Modeling, November 21, 2019, WECC MVWG Jamie Weber, Ph.D.

[24] Kaczmarek, P., et al. (2022). "Experimental study on voltage regulation in nuclear and renewable-integrated systems." Renewable Energy Systems, 45(3), 76-92.

[25] IAEA (2021). Role of Nuclear Power in Grid Stability and Modernization. International Atomic Energy Agency.